# FACTORY PARTS CATALOG
# WASHER

FRIGIDAIRE

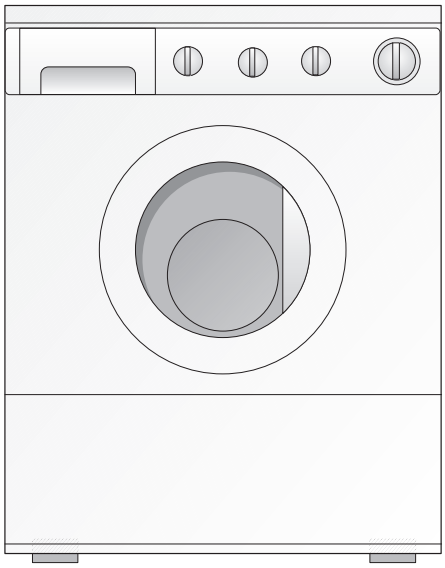

| PRODUCT NO. | BASE MODEL NO. | COLOR |
|---|---|---|
| FWT449GFS2 | FWT449GF | White |

**WIRING DIAGRAM # - 131788100**
**OWNER'S GUIDE # - 131842800**


FRIGIDAIRE
HOME PRODUCTS

6000 Perimeter Drive
Dublin, OH 43017



Publication No.
5995331625
000111
ENG/SERVICE/JAB
361


**FRONTLOAD WASHER**

**Model No.**
**FWT449GF**


©1997White Consolidated Industries, Inc.
All rights reserved

CONTROL PANEL

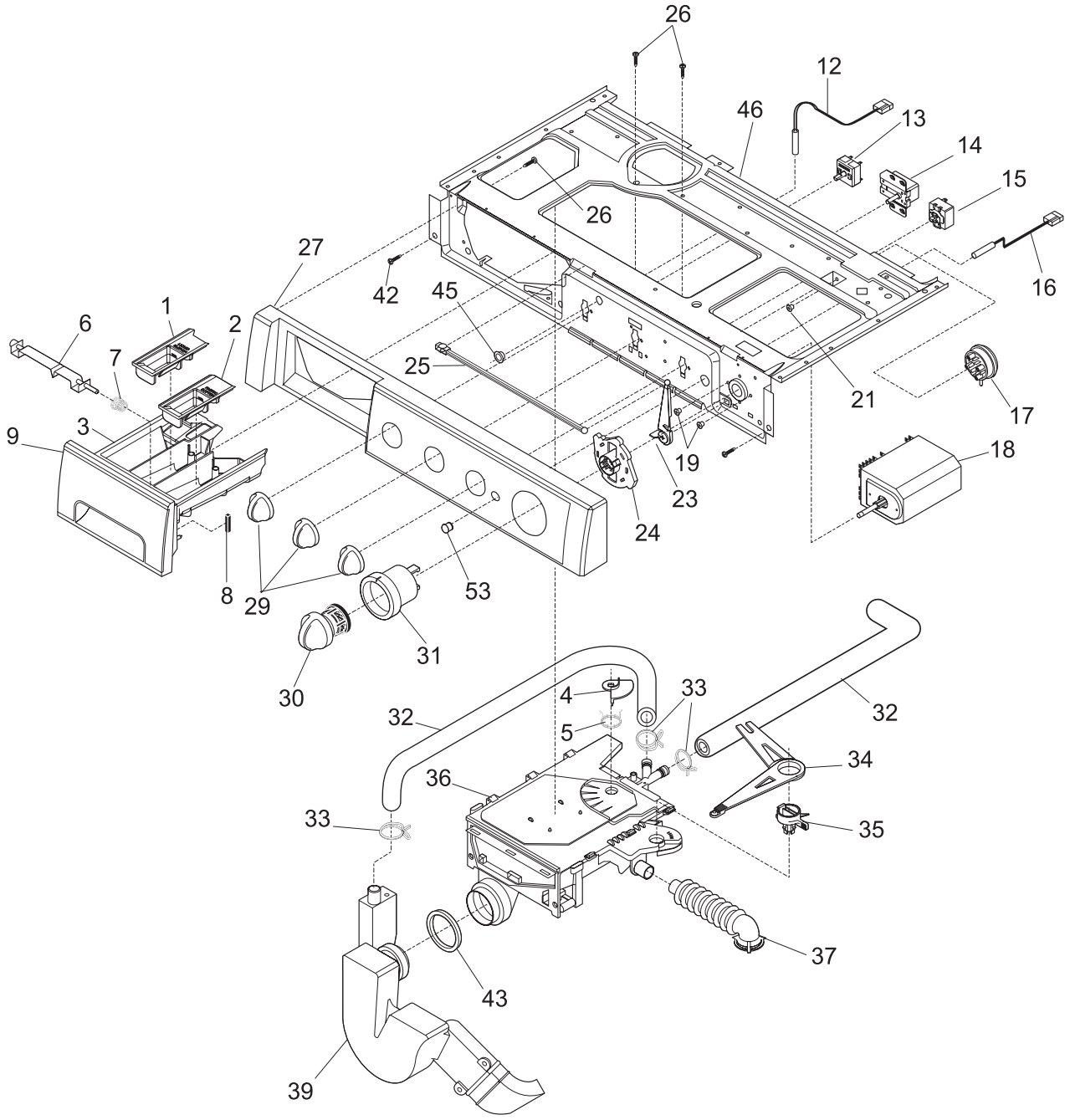


P12C0064

CONTROL PANEL

| POS. NO | PART NO | DESCRIPTION |
|---|---|---|
| 1 | 131272100 | Cover-bleach |
| 2 | 131272000 | Cover-softener |
| 3 | 131271900 | Drawer-dispenser |
| 4 | 131271300 | Pin |
| 5 | 131271200 | Spring |
| 6 | 131374500 | Latch-handle |
| 7 | 131427500 | Spring |
| 8 | 131373800 | Magnet |
| 9 | 131691200 | Handle-white |
| 12 # | 131505900 | Switch-reed |
| 13 | 131729000 | Switch-water temp |
| 14 # | 131048300 | Buzzer |
| 15 | 131243200 | Switch-on/off |
| 16 | 131349000 | Light-pilot |
| 17 # | 131273700 | Switch-pressure |
| 18 | 131800500 | Timer |
| 19 | 131670300 | Screw-timer, 10-32 x .245, quadrex ph |
| 21 | 131243700 | Screw, pan head, 8-18AB x 0.375 cr/sq drive |
| 23 | 131270200 | Lever-cam |
| 24 | 131856300 | Cam-timer |
| 25 | 131271400 | Rod |
| 26 | 131205100 | Screw, #8 pan head, 10-10B x 0.50, cr/sq drive |
| 27 | 131691007 | Asmy-cons frame/trim |
| 29 | 131761704 | Knob-rotary |
| 30 | 131264300 | Knob-timer-white |
| 31 | 131716300 | Dial-timer-white |
| 32 # | 131272400 | Hose-siphon/fill |
| 33 | 131306215 | Clamp |
| 34 | 131465200 | Arm-pivot |
| 35 | 131271500 | Disp-eccentric |
| 36 | 131270300 | Dispenser assy, includes #1, 2, 3, 4, 5, 35 and 37 |
| 37 # | 131271600 | Hose-tub |
| 39 | 131272300 | Duct-fill |
| 42 | 131168200 | Screw, 8-18 x 0.31 |
| 43 | 131749200 | Gasket-seal |
| 45 | 5303321107 | Bushing |
| 46 | 131730600 | Bracket-controls |
| 53 | 131269601 | Lens-pilot light |
| * | 131785900 | Harness-main-TAW, rot 850 rpm |
| * | 131307900 | Clip-bellows to fill duct |

# = Functional Part
* = Non-Illustrated Part

CABINET,DOOR &TOP

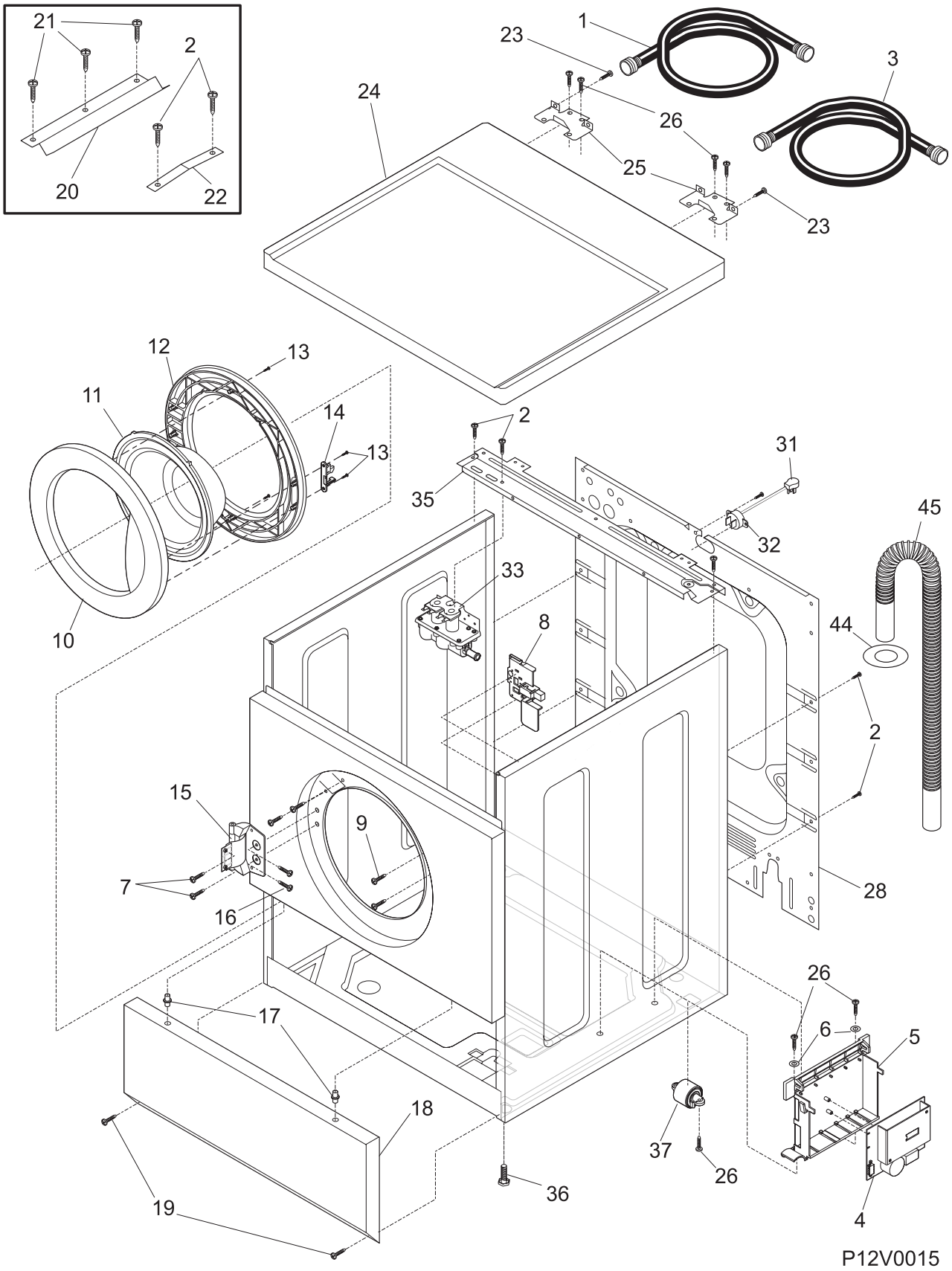

CABINET,DOOR &TOP

| POS. NO | PART NO | DESCRIPTION |
|---|---|---|
| 1 | 131279602 | Asmy-Inlet Hose Cold |
| 2 | 131168200 | Screw, 8-18 x 0.31 |
| 3 | 131279603 | Asmy-Inlet Hose-Hot |
| 4 | 131725300 | Control Speed |
| 5 | 131268900 | Box-control |
| 6 | 131304300 | Washer .21 x .71 x .06 |
| 7 | 131205300 | Screw-door, 10-16 x .75 |
| 8 # | 131763200 | Door lock/switch USCC |
| 9 | 131303300 | Screw-lock, ph ab, 10-16 x .50 |
| 10 | 131278700 | Door-outer |
| 11 | 131278800 | Glass-door |
| 12 | 131278900 | Door-inner |
| 13 | 131302901 | Screw, 10-16 x .75 |
| 14 | 131763300 | Catch-door |
| 15 | 131269300 | Hinge-door |
| 16 | 131696300 | Screw 10-16 x .312 quad pn hd |
| 17 | 131346400 | Pin-locating |
| 18 | 131279300 | Panel-service white |
| 19 | 131358400 | Screw-panel, hwhd ab, 8-18 x 1.125 |
| 20 | 131460900 | Bracket-top front |
| 21 | 131243700 | Screw, pan head, 8-18AB x 0.375, cr/sq drive |
| 22 | 131279500 | Retainer-spring |
| 23 | 131243800 | Screw-brkt top, pan hd locking, 8-32CA x 0.375, cr/sq drive |
| 24 | 131677308 | Panel-top |
| 25 | 131668200 | Bracket-top pnl |
| 26 | 131311900 | Screw, quadrex ph ab, 8-18 x 1/2 |
| 28 | 131734800 | Panel-back |
| 31 | 5303208765 | Cord-service |
| 32 | 5303209428 | Bushing-cord |
| 33 # | 5303207418 | Valve-water |
| 35 | 131732900 | Back-reinforcement |
| 36 | 131003900 | Leg, pad/nut |
| 37 | 131304200 | Roller Assy |
| 44 | 131707800 | Ring-drain hose |
| 45 # | 131461200 | Hose-drain, 90 inch |
| * | 131453001 | Bushing-top panel |

# = Functional Part
* = Non-Illustrated Part

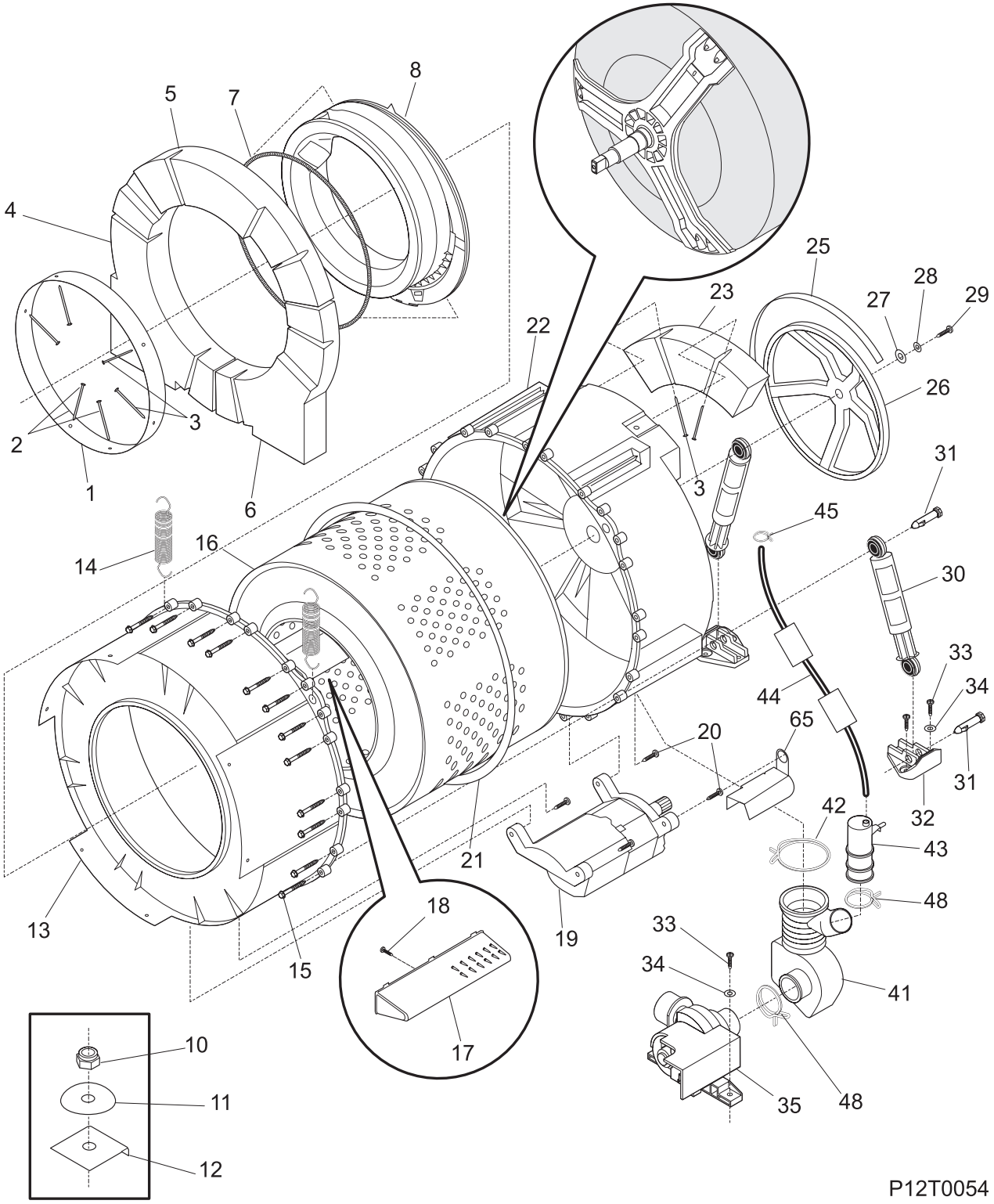
8
5
7
4
25
28
23
27
29
22
26
3
2
1
6
3
31
45
14
16
30
33
34
44
65
20
31
32
42
43
21
48
13
18
19
33
15
34
41
17
10
11
35
48
12
P12T0054

TUB & MOTOR

| POS. NO | PART NO | DESCRIPTION |
|---|---|---|
| 1 | 131793400 | Ring-weight |
| 2 | 131793301 | Bolt-carriage 1/4-20 x 4.50 |
| 3 | 131793300 | Bolt-carriage 1/4-20 x 4.15 |
| 4 | 131276500 | Weight-lwr left |
| 5 | 131276600 | Weight-top front |
| 6 | 131851900 | Counterweight-lower right |
| 7 | 131277300 | Spring-boot |
| 8 | 131277100 | Boot |
| 10 | 131304700 | Nut |
| 11 | 131276900 | Washer-spring |
| 12 | 131793500 | Plate-weight |
| 13 | 131618600 | Shell-front tub |
| 14 | 131663600 | Spring/sleeve |
| 15 | 131303900 | Screw, hxwhd a, 1/4-10 x 2.165 |
| 16 | 131618500 | Tub-spin |
| 17 | 131274600 | Vane |
| 18 | 131302800 | Screw-vane, quad ph ab, 10-16 x .375 |
| 19 # | 131276200 | Motor-main, 850 |
| 20 | 131303500 | Screw-motor, hwhd ab, 12-14 x 1.50 |
| 21 | 131275900 | Seal-shell |
| 22 | 131462800 | Shell-rear/bearing |
| 23 | 131709300 | Weight-upper back |
| 25 # | 131276300 | Belt |
| 26 # | 131632500 | Pulley-drum |
| 27 | 131304400 | Washer .41 x 1.500 x .120 |
| 28 | 131304500 | Washer-lock, 3/8 |
| 29 | 131303700 | Screw-pulley, m10 x .92 |
| 30 | 131268200 | Level-shock |
| 31 | 131268300 | Pin-level |
| 32 | 131268100 | Bracket-shock |
| 33 | 131303100 | Screw-bracket, hwhd ab, 10-16 x .625 |
| 34 | 131304300 | Washer .21 x .71 x .06 |
| 35 | 131723500 | Pump-drain |
| 41 | 131784700 | Hose-coin trap-tub to pump |
| 42 | 131333101 | Clamp |
| 43 | 131277500 | Chamber-air |
| 44 | 131277600 | Tube-pressure |
| 45 | 131306202 | Clamp |
| 48 | 131306234 | Clamp-pump |
| 65 | 131702200 | Shield-motor |
| * | 131560000 | Sleeve-lower spring, tub |
| * | 131592200 | Sleeve-upper spring, tub |

# = Functional Part
* = Non-Illustrated Part

# WIRING DIAGRAM

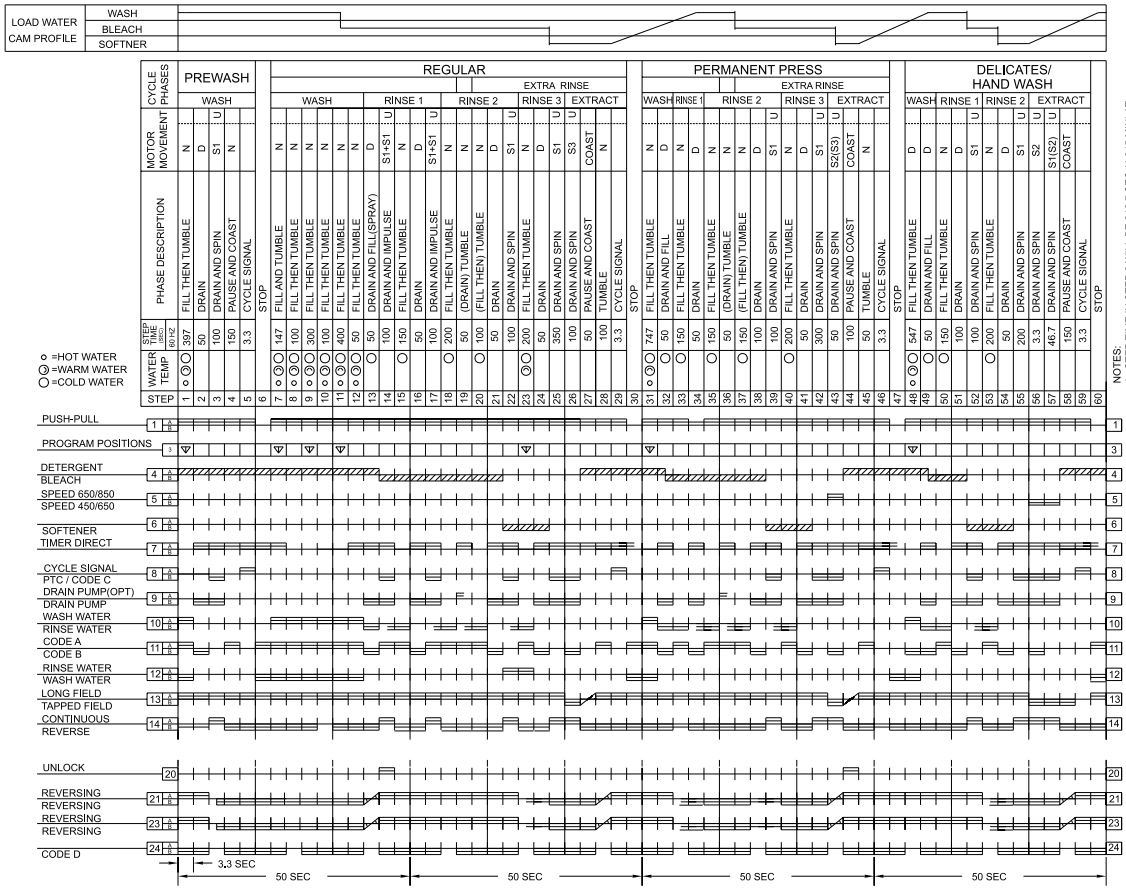


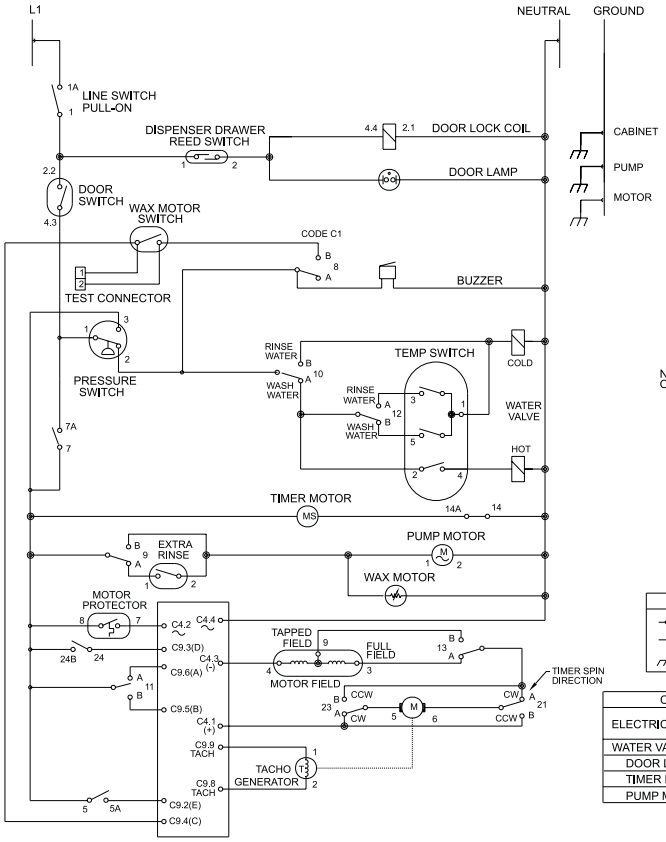

NO LOAD, START POSITION OF PERMANENT PRESS

SPEED CONTROL UNIT OPERATION

| DRUM RPM | PHASES DESCRIPTION | CODE | E | D | C | B | A |
|---|---|---|---|---|---|---|---|
| | | | 5 A/B | 24B | 8B | 11B | 11A |
| 0 | NO ACTION | / | X | 0 | 0 | 0 | X |
| 0 | NO ACTION | / | X | X | 0 | 0 | 0 |
| 0 | NO ACTION | / | X | 0 | 0 | 1 | X |
| 0 | NO ACTION | / | X | X | 0 | 1 | 1 |
| 0 | NO ACTION | / | X | 0 | X | 1 | 1 |
| 0 | NO ACTION | / | X | X | 1 | 1 | 1 |
| 52 | AGIT - CONTINUOUS | N | X | 1 | 0 | 0 | 1 |
| 52 | AGIT - DUTY CYCLE | D | X | 1 | 0 | 1 | 0 |
| 450 | INTERVAL SPIN | S1+S1 | X | X | 1 | 0 | 1 |
| 450 | SPIN - CONTINUOUS | S1 | X | X | 1 | 0 | 0 |
| 650 | SPIN - CONTINUOUS | S2 | 1 | X | 1 | 1 | 0 |
| 850 | SPIN - CONTINUOUS | S3 | 0 | X | 1 | 1 | 0 |

1=120 VAC 0=0 VAC X=DON'T CARE (1 OR 0)

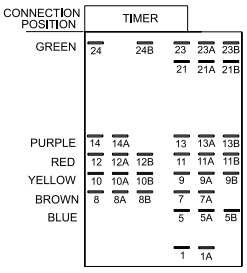


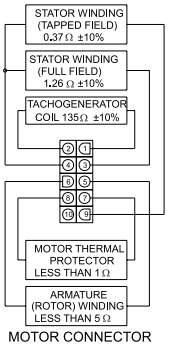


| WATER TEMPERATURE SWITCH | | | |
|---|---|---|---|
| CIRCUIT | | | |
| WASH/ RINSE | 1-3 | 1-5 | 2-4 |
| C/C | | X | |
| W/C | | X | X |
| W/W | X | X | X |
| H/C | | | X |

| WIRING CODES |
|---|
| CONNECTION |
| NO CONNECTION |
| CABINET GROUND |

| COMPONENT RESISTANCE TABLE | |
|---|---|
| ELECTRICAL COMPONENT | RESISTANCE Ω ± 10% @ 77°F(25°C) |
| WATER VALVE SOLENOIDS | 880 |
| DOOR LOCK SOLENOID | 380 |
| TIMER MOTOR | 2070 |
| PUMP MOTOR | 4.6 |

**WARNING** TO REDUCE THE RISK OF ELECTRICAL SHOCK DISCONNECT THIS APPLIANCE FROM THE POWER SUPPLY BEFORE ATTEMPTING ANY USER MAINTENANCE. TURNING THE CONTROLS TO THE OFF POSITION DOES NOT DISCONNECT THIS APPLIANCE FROM THE POWER SUPPLY.

WIRING DIAGRAM
P/N 131788100